Click or scan QR code to view latest spec sheet

Click for: **Asymmetric Version**

Revision Date: April 18, 2025

Gammalux Lighting Systems reserves the right to change details of fixture designs and construction at any time.

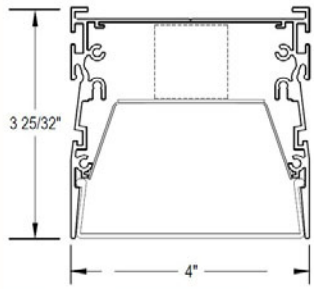

LED LAMPING

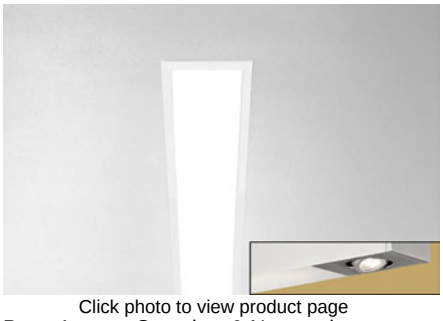

Click photo to view product page

Page 1: Overview & Nomenclature
Pages 2-3: Specifications
Pages 4-5: Photometric Info / Downloads
Page 6: Mounting Details
Pages 8-9: Mud Flange & Images
Pages 10-11: Custom Programming

Product Overview (for complete specifications, see pages 2 & 3) ******NEW****** See last page for APPROVED CUT RELEASE.

Quick Ship: Most product options are shippable within 2-3 weeks! **Check our Quick Ship Guide for details**.

Construction: I.C. rated. BABA, ARRA, RoHS, REACH and Prop 65 compliant. Extruded aluminum housing for superior fit and finish. Grid mounted version can be installed from below. Runs and patterns have a single item # and can be built to field dims.

Unbroken Illumination: Continuous illumination in custom-length runs and patterns with illuminated corners.

Electrical: LED components by major manufacturers, may be upgraded in the field to increase energy efficiency. Fixtures can be fitted with specialty LED and control components (consult factory). Standard Output, High Output and Custom Output options available.

Standard Nomenclature

Quick Ship Eligible
Most options 2-3 weeks^

Manufacturer
Gammalux

Cross Section (nom)
4”x 4”

Output
S Standard Output
H High Output
C Custom Output (see addendum page)

Color Temp. (nom)
27 2700K **50** 5000K
30 3000K **RGB***
35 3500K **RGBW_ _ _***
40 4000K

Driver
ZTV10 0-10V Dim to 10%
ZTV1 0-10V Dim to 1%
For all options, see next page

Length Option
S Specific
N Nominal
(Nominal is recommended for grid mount)

Ceiling Interface
GFR Gyp w/ .5" cover flange
GMR Gyp w/ mud flange
NFR No flange or interface
T1W 15/16” flat grid w/ flat tiles
T1TW 15/16” flat grid w/ tegular tiles
T9W 9/16” flat grid w/ flat tiles
T9TW 9/16” flat grid w/ tegular tiles
TSW 9/16” slot grid
Consult factory for all others.

Paint Colors
W White (See color chart for other colors)
CCM Custom Color Match

Paint Finish
H High Gloss
SG Semi-Gloss

GB44RC2 – SL358 – UNIV – ZTV10 – 4’N – REC/XXXX – ASLMD – WSG –

Model
2nd Gen

Housing
RC Recessed

Series
Beam

CRI**
8 for 80+
9 for 90+

Lamp
LED

Voltage
120V, 277V, UNIV

Run or Pattern
Specify total run length (i.e. **43’ 5 1/8”**)
For illuminated patterns, follow overall length with **L**, **T**, **X**, **U**, **RECT** or **SQ.** Examples:
23’6” x 17’2” L Pattern would be **41’LPTTN**.
12’ x 12’ Square Pattern would be **48’SQPTTN**.
Provide leg dimensions as a line note in the spec.

Mounting
REC Recessed in ceiling.
Consult factory for in-wall.

Shielding
ASLMD Acrylic Satin Lens, Medium Diffuse
Consult factory for other options

Options
BPE Battery Pack (4’ section)
DL UL Damp Label
EMERG Emergency Ckt
2CKT Dual Circuiting
SBO Sensor By Others#

** 90+ CRI increases watts nom. 14.5%. # Sensor by Others (consult factory).
^Some restrictions apply. **Check our Quick Ship Guide for details**.

248 East Arrow Highway, San Dimas, CA 91773 Tel 909.599.9669 | 800.356.3275
Fax 909.599.5288 E-mail: info@gammalux.com
Gammalux products comply with ARRA Buy American requirements

Specifications (continued on next page)

Electrical

Output: Standard (**S**) and high (**H**) options deliver a pre-set lumen package (see chart below). Custom-programmed output (**C**) is specified as LPF, WPF or % of High Output (see Custom Programmed Output page).
Static Driver: eldoLED Optotronic* programmable driver, wired for static operation (**DVR**).
0-10V Dimming: eldoLED Optotronic* programmable driver, wired for 0-10v control and dimming to 10% (**ZTV10**) or to 1% (**ZTV1**).
Step Dimming: Generic step dimming driver, two hot inputs for 100% and 50% output (**SD2**).
DALI Dimming: Generic DALI driver with two loose control wires exiting fixture at power feed location (**DALI**).
Lutron Dimming: Hi-Lume dim to 1% EcoSystem with Soft-On, Fade-to-Black (**LDE1**).
White Emitter: Nichia 757G emitters* binned within 3 MacAdam ellipses in Osram or Gammalux proprietary array. 90+ CRI option with extended lead time (CRI code **9**) results in nominal 14.5% drop in efficacy; increase calculated watts 14.5%.
Battery Pack: Bodine BSL10T3* (**BPE**). 4W max input, 10W initial output, delivers min. 27% of High Output value per 4' length.
LED System: 70% lumen output (L70) at max 85 degrees C calculated at >60k hours. Fixtures are shipped with anti-static gloves to minimize the risk of damage to LEDs during installation. 5 year limited warranty.
Sensors: Sensors are as specified, confirmed by Gammalux prior to factory quote. Examples are Enlighted Micro Sensor, Lutron Athena Wireles Node, Lutron Vive, Wattstopper FS-205.
Upgrade Capability: LED assemblies can be replaced in the future with the latest factory-provided and fully warranted components. On-board sensors, control interface devices and alternate LED components may be specified (consult factory). Fixtures bear UL & cUL Dry Location label. Damp Location label available (**DL**).
*Subject to availability; may be substituted by Gammalux. Components and specifications may be changed without notice.

LUMENS AND WATTS BY OUTPUT OPTION AND LED COLOR @ 80+ CRI*											
STANDARD OUTPUT LED						HIGH OUTPUT LED					
MEDIUM DIFFUSE LENS (ASLMD) DELIVERS: **546.9 LPF** HEAVY DIFFUSE (ASLHD) DELIVERS: **465 LPF**						MEDIUM DIFFUSE LENS (ASLMD) DELIVERS: **729.3 LPF** HEAVY DIFFUSE (ASLHD) DELIVERS: **620 LPF**					
CCT	2700 K	3000 K	3500 K*	4000 K	5000 K	CCT	2700 K	3000 K	3500 K*	4000 K	5000 K
WATTS / FT.	6.3	5.9	5.8	5.7	5.4	WATTS / FT.	8.6	8.2	8	7.8	7.4
* IES FILES WERE CREATED USING 3500 K DIODES @ 80+ CRI. WATTAGE IS MULTIPLIED BY 1.06 FOR 2700 K, 1.02 FOR 3000 K , .98 FOR 4000 K AND .93 FOR 5000 K DIODES TO MAINTAIN THE SAME DELIVERED LUMENS THROUGHOUT ALL COLOR TEMPERATURES. FOR 90+ CRI, INCREASE WATTAGE BY 14.5%. SEE ADDENDUM FOR CUSTOM PROGRAMMING.											

Construction

Housing: I.C. rated. BABA, ARRA, RoHS, REACH and Prop 65 compliant. Extruded aluminum body 4.00" wide x 3.8" high, 6063T5, 0.070" min thickness. Each housing is 12' max unless longer housings are pre-coordinated with the factory to reduce joints and installation labor. Fixtures are built per approved factory drawings and tested as a complete system at the factory. Continuous runs and patterns are ordered, built and shipped with a single item #. Fixtures ordered as individuals are not designed to be joined together in the field.

Joiner System: Automatic alignment, no loose parts, one tool to tighten factory installed bolts for hairline seam. No light leaks.

Lamping: Patterns are fully illuminated. Runs ordered in Specific Length (Length Option **S**) will be built to the exact dimension shown on signature-approved shop drawings. Runs ordered in Nominal Length (Option **N**) may be factory-adjusted to accomodate standard mounting positions or grid centers. Factory drawings will show all dimensions of mounting and power feed locations. Fixtures built to less than 4' may require remote driver installation - consult factory.

Mounting: Recessed into a ceiling system (**REC**). Fixtures surrounded by grid should be ordered in Nominal length (Length Option **N**) and can be installed from below. Consult factory for in-wall installation. Mud flange (**GMR**) includes integral expansion gap to allow for heat expansion with no pressure on surrounding plaster. GMR FIXTURE MUST BE INSTALLED PRIOR TO GYP.

248 East Arrow Highway, San Dimas, CA 91773 Tel 909.599.9669 | 800.356.3275
Fax 909.599.5288 E-mail: info@gammalux.com

Specifications (continued)

Optical

Reflectors: Shall be formed diffuse high reflectance aluminum.

Acrylic Satin Lens, Medium Diffuse: Snap-in. Shall be 100% DR acrylic (**ASLMD**).

Acrylic Satin Lens, Heavy Diffuse: Snap-in. Shall be 100% DR acrylic (**ASLHD**).

See lens images on photometric pages.

Finish

Acid etched or clear annodized housing electrostatically sprayed with high solids aliphatic two component polyurethane high (**H**) or semi-gloss (**SG**) to an avg. thickness of 2 mils. Unless specified otherwise, cable mount canopies are white semi-gloss and all other painted mounting components match the fixture finish. Custom finish, consult factory. Wood Finishes, back page.

Packing and Shipping

Fixtures built for continuous rows and patterns are given a specific location identifier, clearly identified on factory layout drawings, the fixture's ID Label, protective wrapping and on each end of fixture carton. Shipping pallets are built with 2" clearance, extending beyond the length and width of cartons, providing shipping protection.

Approx. weight of 4' module is 18 lbs. including carton. Weight of pallet and supplemental packing materials not factored in.

248 East Arrow Highway, San Dimas, CA 91773 Tel 909.599.9669 | 800.356.3275
Fax 909.599.5288 E-mail: info@gammalux.com
Gammalux products comply with ARRA Buy American requirements

Photometric Reports for
STANDARD OUTPUT FIXTURES

FIXTURE USES LENS ASLMD (MEDIUM DIFFUSE) AND 3500K LEDs @ 80+ CRI

IESNA: LM-63-2002
ISSUEDATE: 09/08/2020
TEST: 13482814.07 MOD TO SO,
TESTLAB: UL VERIFICATION SVCS, INC.
MANUFAC: GAMMALUX LTG SYS
LUMCAT: GB44RC21SL358ASLMD
LAMPS: 144 WHITE LEDs

EFFICACY (TOTAL): 87.5 LPW
DISTRIBUTION % UP: 0%
DISTRIBUTION % DN: 100% (546.9 LPF)
CIE CLASSIFICATION: DIRECT

Acrylic Satin Lens, Medium Diffuse (ASLMD)

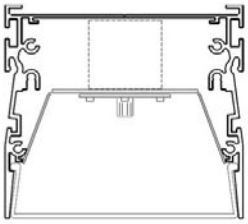

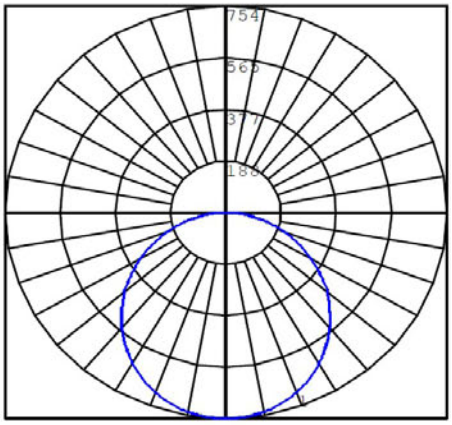

LUMINOUS OPENING: RECTANGULAR
WIDTH: 4 in.
LENGTH: 48.5 in.

INPUT WATTS: 25 per 4'

FIXTURE USES LENS ASLHD (HEAVY DIFFUSE) AND 3500K LEDs @ 80+ CRI

IESNA: LM-63-2002
ISSUEDATE: 09/08/2020
TEST: 13482814.07 MOD TO SO, HD
TESTLAB: UL VERIFICATION SVCS, INC.
MANUFAC: GAMMALUX LTG SYS
LUMCAT: GB44RC21SL358ASLHD
LAMPS: 144 WHITE LEDs

EFFICACY (TOTAL): 74.4 LPW
DISTRIBUTION % UP: 0%
DISTRIBUTION % DN: 100% (465 LPF)
CIE CLASSIFICATION: DIRECT

Acrylic Satin Lens, Medium Diffuse (ASLMD)

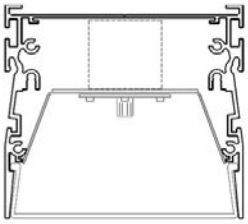

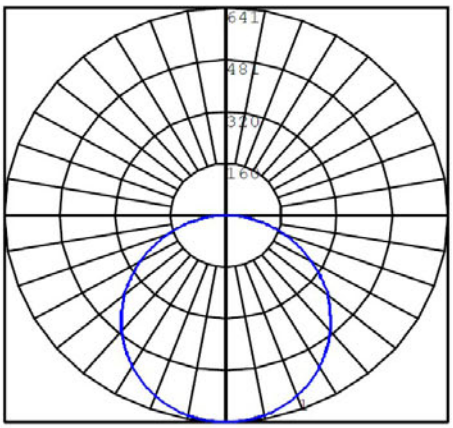

LUMINOUS OPENING: RECTANGULAR
WIDTH: 4 in.
LENGTH: 48.5 in.

INPUT WATTS: 25 per 4'

Photometric Reports for
HIGH OUTPUT FIXTURES

FIXTURE USES LENS ASLMD (MEDIUM DIFFUSE) AND 3500K LEDs @ 80+ CRI

IESNA: LM-63-2002
ISSUEDATE: 09/08/2020
TEST: 13482814.07
TESTLAB: UL VERIFICATION SVCS, INC.
MANUFAC: GAMMALUX LTG SYS
LUMCAT: GB44RC21HL358ASLMD
LAMPS: 144 WHITE LEDs

EFFICACY (TOTAL): 87.6 LPW
DISTRIBUTION % UP: 0%
DISTRIBUTION % DN: 100% (729.3 LPF)
CIE CLASSIFICATION: DIRECT

LUMINOUS OPENING: RECTANGULAR
WIDTH: 4 in.
LENGTH: 48.5 in.

INPUT WATTS: 33.3 per 4'

Acrylic Satin Lens, Medium Diffuse (ASLMD)

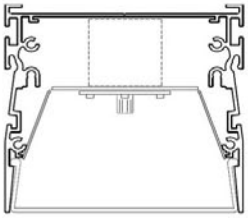

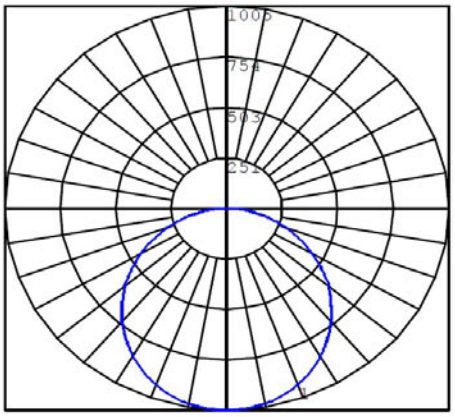

FIXTURE USES LENS ASLHD (HEAVY DIFFUSE) AND 3500K LEDs @ 80+ CRI

IESNA: LM-63-2002
ISSUEDATE: 09/08/2020
TEST: 13482814.07, MOD TO HD
TESTLAB: UL VERIFICATION SVCS, INC.
MANUFAC: GAMMALUX LTG SYS
LUMCAT: GB44RC21HL358ASLHD
LAMPS: 144 WHITE LEDs

EFFICACY (TOTAL): 74.5 LPW
DISTRIBUTION % UP: 0%
DISTRIBUTION % DN: 100% (620 LPF)
CIE CLASSIFICATION: DIRECT

LUMINOUS OPENING: RECTANGULAR
WIDTH: 4 in.
LENGTH: 48.5 in.

INPUT WATTS: 33.3 per 4'

Acrylic Satin Lens, Medium Diffuse (ASLHD)

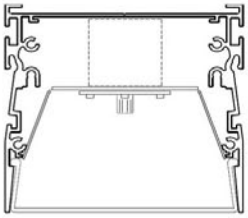

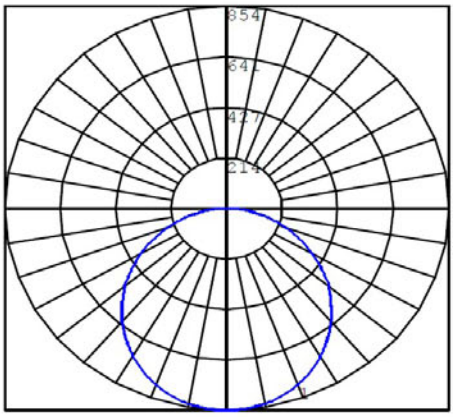

Mounting Details

Factory Drawings: Fully dimensioned factory drawings will be provided upon receipt of purchase order.

Grid Mount

15/16" Flat TBar:
Specify **T1W** code in catalog #

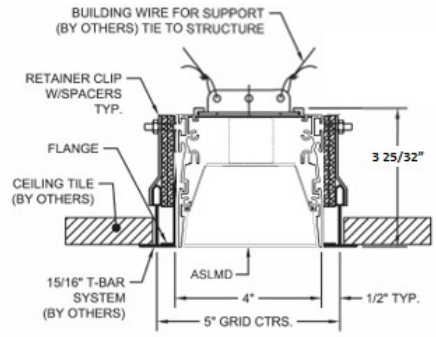

9/16" Flat TBar:
Specify **T9W** code in catalog #

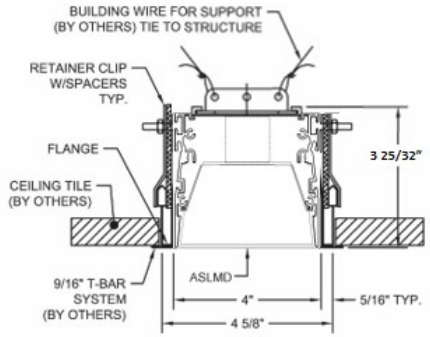

15/16" Flat TBar with Tegular Tiles:
Specify **T1TW** code in catalog #

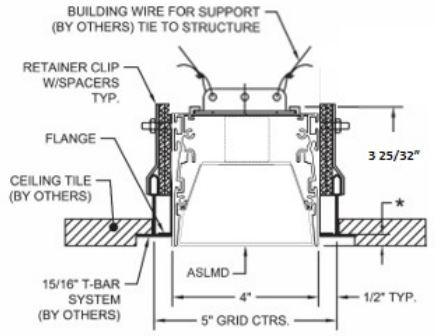

9/16" Flat TBar with Tegular Tiles:
Specify **T9TW** code in catalog #

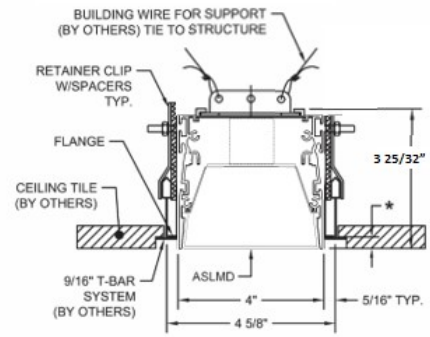

9/16" Slot Grid:
Specify **TSW** code in catalog #

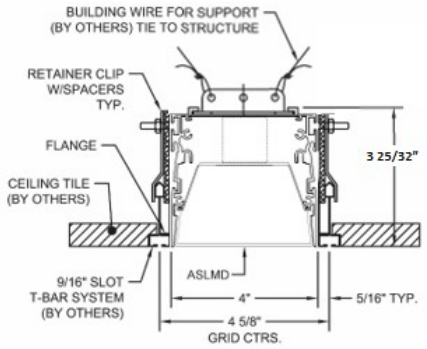

*Contractor must provide dimensions to Gammalux.

Hard Ceiling Mount

Gyp type ceiling with cover flange:
Specify **GFR** code in catalog #

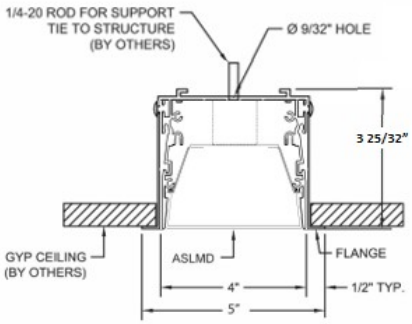

Gyp type ceiling Mud Flange:
Specify **GMR** code in catalog #

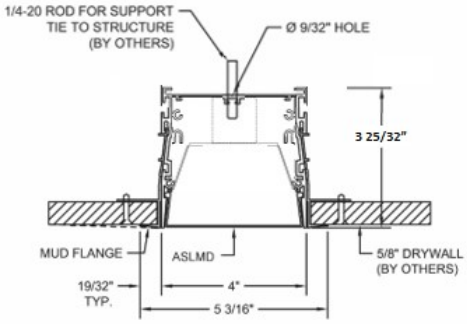

Undetermined ceiling, Flangeless:
Specify **NFR** code in catalog #

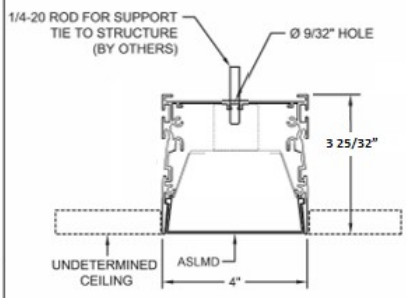

Gammalux Lighting Systems reserves the right to change the details of fixture design and construction at any time.

248 East Arrow Highway, San Dimas, CA 91773 Tel 909.599.9669 | 800.356.3275
Fax 909.599.5288 E-mail: info@gammalux.com
Gammalux products comply with ARRA Buy American requirements

Mud Flange Detail

Fixture ships with steel spacer bracket to maintain aperture integrity during installation.

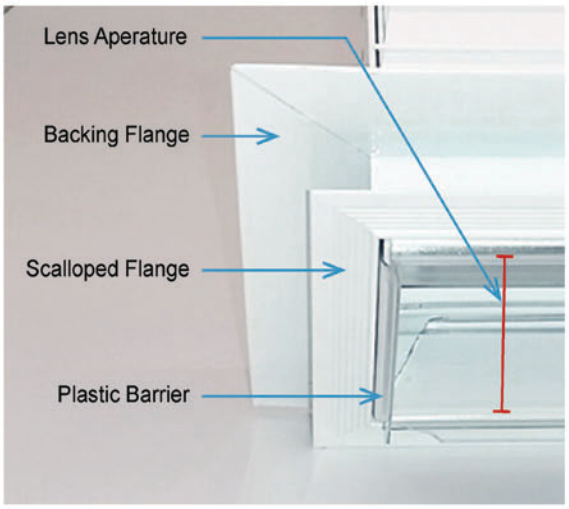

Mud flange assembly consists of a backing flange and scalloped flange. Plastic barriers protect the integral expansion gap from mud and paint.

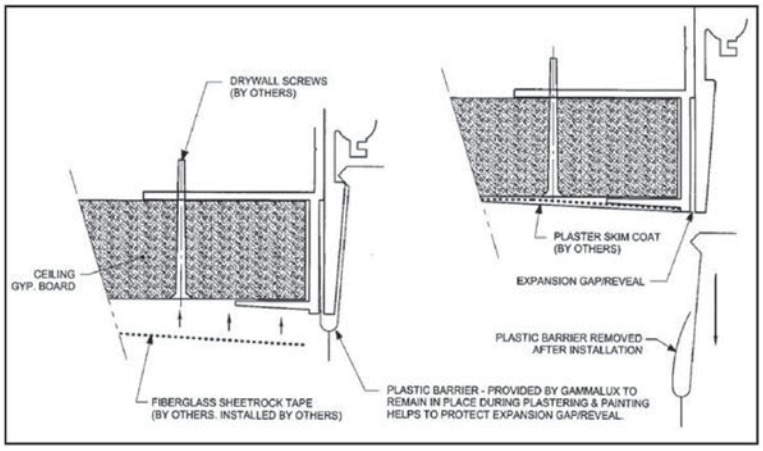

Gyp material is embedded between the backing flange and scalloped flange, then drywall screws secure the drywall to the backing flange. Fiberglass tape, skim coat of plaster and paint are added on top of the scalloped flange with the plastic barrier installed throughout all procedures. After paint is dry, plastic barrier is removed, revealing clean expansion gap.

248 East Arrow Highway, San Dimas, CA 91773 Tel 909.599.9669 | 800.356.3275
Fax 909.599.5288 E-mail: info@gammalux.com
Gammalux products comply with ARRA Buy American requirements

Sample Installations

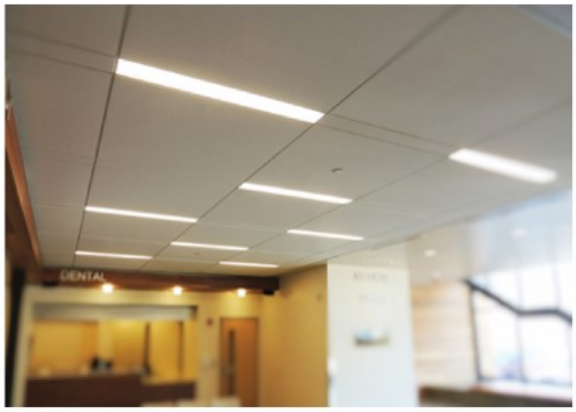

Flush with 15/16" grid (T1W)

Modified per spec

Dropped with tegular tiles in 9/16" grid (T9TW)

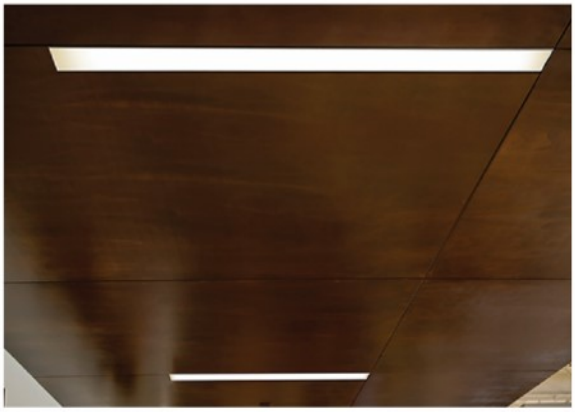

No flange (NFR)

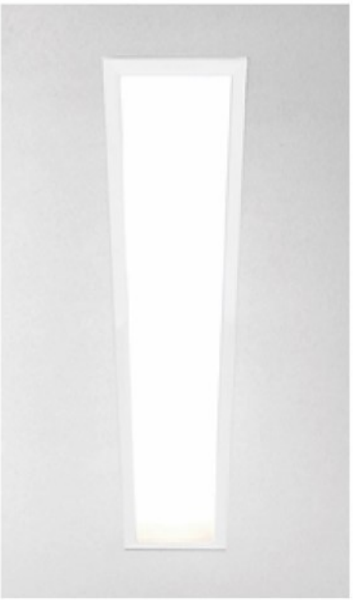

Cover flange (GFR)

Mud flange in gyp wall (GMU)

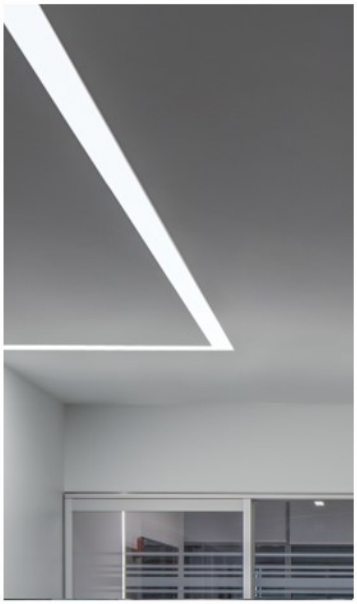

Mud flange in gyp ceiling (GMR)

Custom Programmed Output

Custom Programmed Output can be specified to produce approximate Delivered Lumens per Foot, Percentage of High Output Value or Maximum Watts per Foot.

Delivered Lumens Per Foot

Gammalux deals only in delivered lumens per foot. When working to match or exceed a competitor product's Lumens Per Foot package, be sure you are looking at their Delivered (through the lens) lumens per foot, not their System (bare board) lumens per foot.

In the Gammalux item #, use **C** as the Output designator and add a fixture description stating the required Lumens Per Foot value (ie: if you need 600 lumens per foot delivered by the fixture, the line note would read "Program = 600 LPF").

Percentage of High Output Value

If the required delivered lumens per foot are not known, run lighting calculations using our High Output IES file and identify the percentage of increase or decrease required to produce the correct lighting in the space.

In the Gammalux item #, use **C** as the Output designator and add a fixture description stating the required percentage of decrease from our High Output value (ie: for 60% of our High Output value, the line note would read "Program = 60% of High Output").

Maximum Watts Per Foot

In the Gammalux item #, use **C** as the Output designator and add a fixture description stating the required Maximum Watts per Foot (ie: if you need the fixtures capped at a maximum of 7 watts per foot, the line note would read "Program = 7 WPF").

For all three methods, custom programming capability is currently 25-200% of our High Output value. For requirements outside of this range, consult factory.

Approved Cut Release option

If offered for Approved Cut Release in the Gammalux factory quote, the product in the accompanying purchase order is authorized by the GC to be released to production without the need for factory drawings for approval.

I confirm that:

- all ordering options are clearly noted (highlighted, boxed, written in, etc.) on page 1 of this fixture cut sheet
- quoted leadtime begins upon Gammalux's confirmation that the P.O. and marked cut sheet match their quote.
- the order will be released to production and a "record only" drawing will be provided prior to product shipment
- changes after Gammalux's release to production will result in a minimum 25% change fee which increases as production progresses.

General Contractor_____

GC's authorized Signature (or stamp below)_____

Signatory's printed name_____